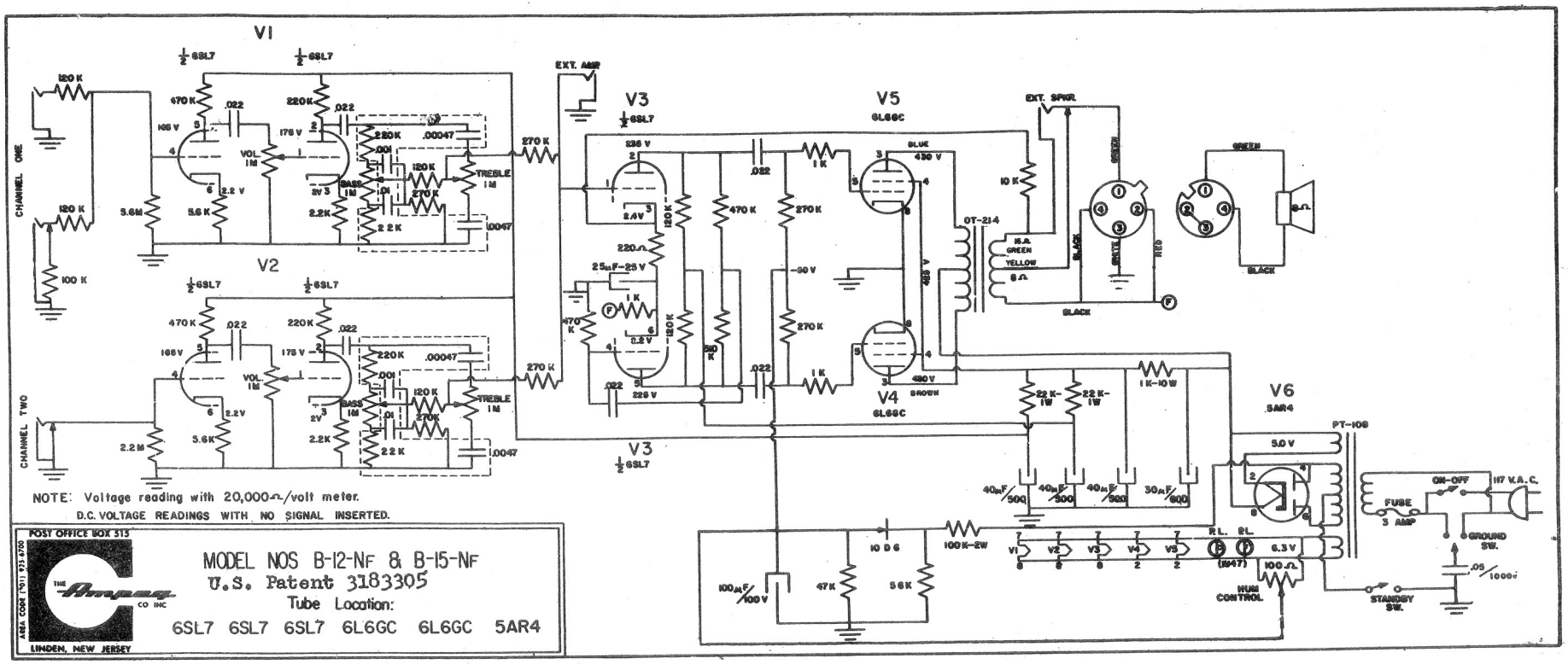
V1
½ 6SL7
½ 6SL7
CHANNEL ONE
CHANNEL TWO
V2
V3
V4
V5
V6
6L6GC
5AR4
EXT. AMP
EXT. SPKR.
OT-214
PT-106
VOL. 1M
BASS 1M
TREBLE 1M
HUM CONTROL
STANDBY SW.
GROUND SW.
ON-OFF
FUSE 3 AMP
117 V.A.C.
NOTE: Voltage reading with 20,000Ω/volt meter.
D.C. VOLTAGE READINGS WITH NO SIGNAL INSERTED.
POST OFFICE BOX 315
AREA CODE (908) 925-6700
THE Amperex CO INC
LINDEN, NEW JERSEY
MODEL NOS B-12-NF & B-15-NF
U.S. Patent 3183305
Tube Location:
6SL7 6SL7 6SL7 6L6GC 6L6GC 5AR4