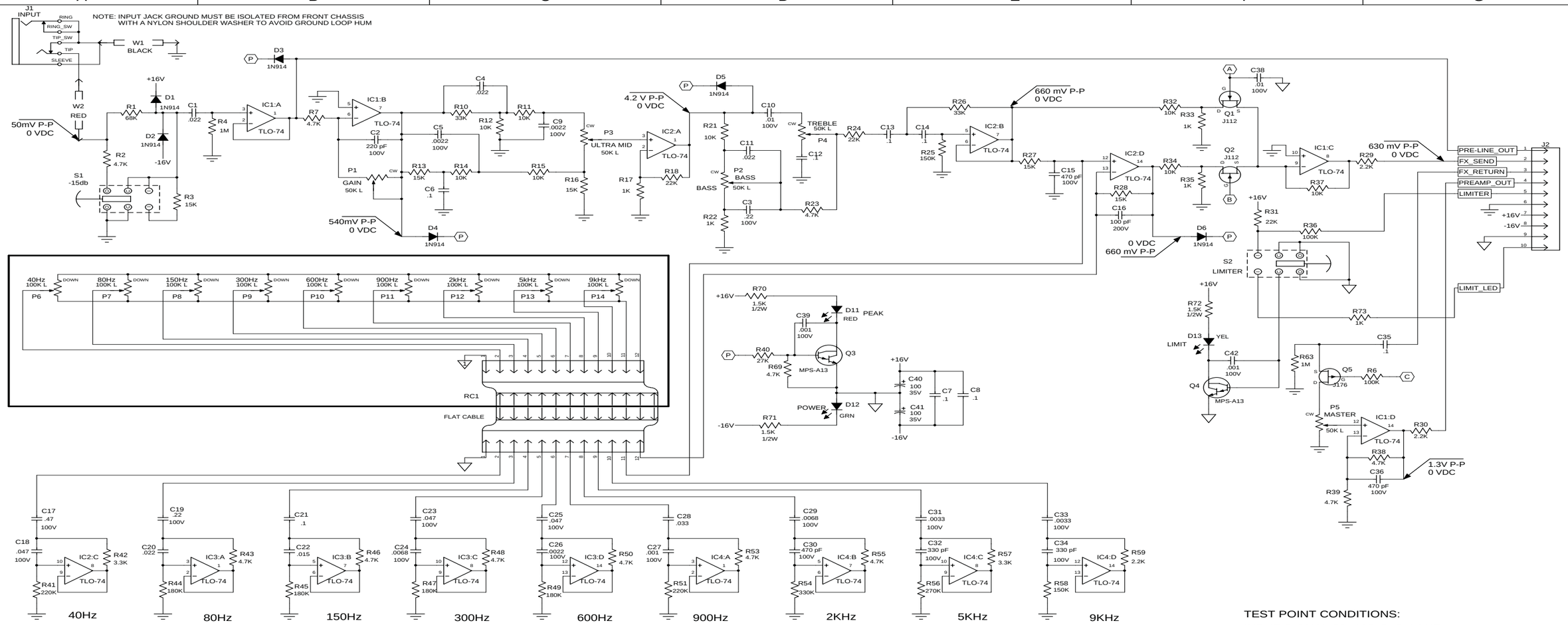

TEST POINT CONDITIONS:

INPUT SIGNAL 50mV P-P @ 1 kHZ
GAIN AND LEVEL @ "10", EQ'S @ 5
GRAPHIC EQ OFF, LIMITER OFF, -15db OFF

Power Table				
Ref Des	Device(Type)	Package	-16V	+16V
IC1	3707401_	14DIP_3	11	4
IC2	3707401_	14DIP_3	11	4
IC3	3707401_	14DIP_3	11	4
IC4	3707401_	14DIP_3	11	4

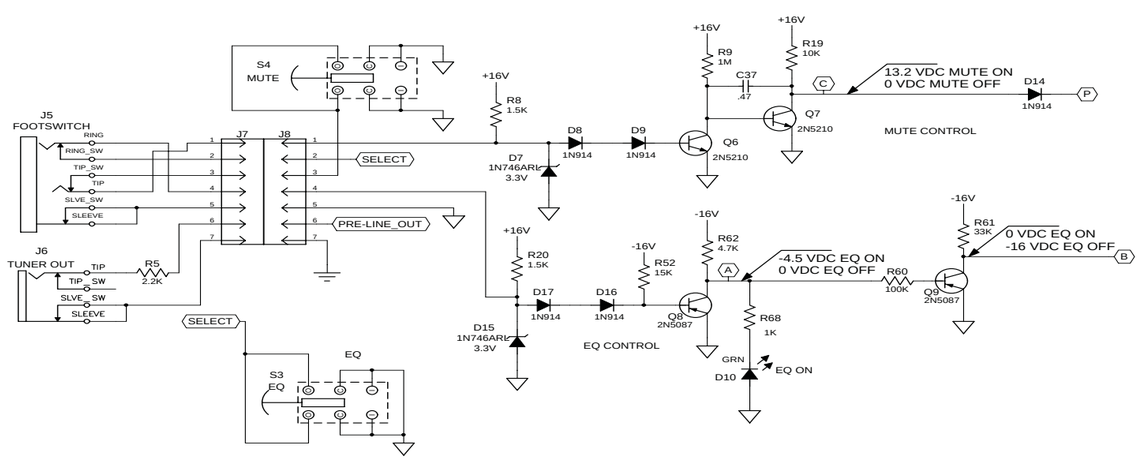

CAUTION:

THIS SCHEMATIC IS PROVIDED FOR USE BY QUALIFIED PERSONNEL. TO AVOID RISK OF ELECTRIC SHOCK, REFER SERVICING TO QUALIFIED SERVICE PERSONNEL. DO NOT PERFORM ANY SERVICING BEYOND THAT EXPLAINED IN THE OPERATING INSTRUCTIONS.

NOTES:
1) CAUTION: SHOCK HAZARD!! THIS UNIT CONTAINS HAZARDOUS VOLTAGE. DISCONNECT POWER AND BE SURE POWER SUPPLY IS DISCHARGED BEFORE TOUCHING INTERNAL PARTS.
2) UNLESS NOTED, RESISTOR VALUES IN OHMS, 1/8W-5% TOL. CAPACITOR VALUES IN MICROFARADS, 50V-10% TOL.
3) VOLTAGES ARE MEASURED WITH 1 MEGOHM OSCILLOSCOPE AND 10 MEGOHM DIGITAL VOLTMETER.

REV	Date	DESCRIPTION	Ecr(s)/Ecn(s)	Chgd By	Appvd by	Date
0	02/13/04	CONTROL ISSUE		WFB		
A	11/13/03	INITIAL ISSUE		WFB		

THE INFORMATION CONTAINED ON THIS DRAWING IS PROPRIETARY TO ST. LOUIS MUSIC, INC

Signatures:		Date:
Drawn:	WFB	07/31/03
Checked:		
Released:		

11880 Borman Drive, St. Louis, MO 63146

First Used On:

Plot Date: Fri Feb 13, 2004	Drawing Size: C	Drawing Title: BASS PREAMP
Plot Time: 10:45:15	Drawing Type: Schematic	
Tolerance:	Class Code: NONE	Drawing Number: 07S679
	Sheet 1 of 1	