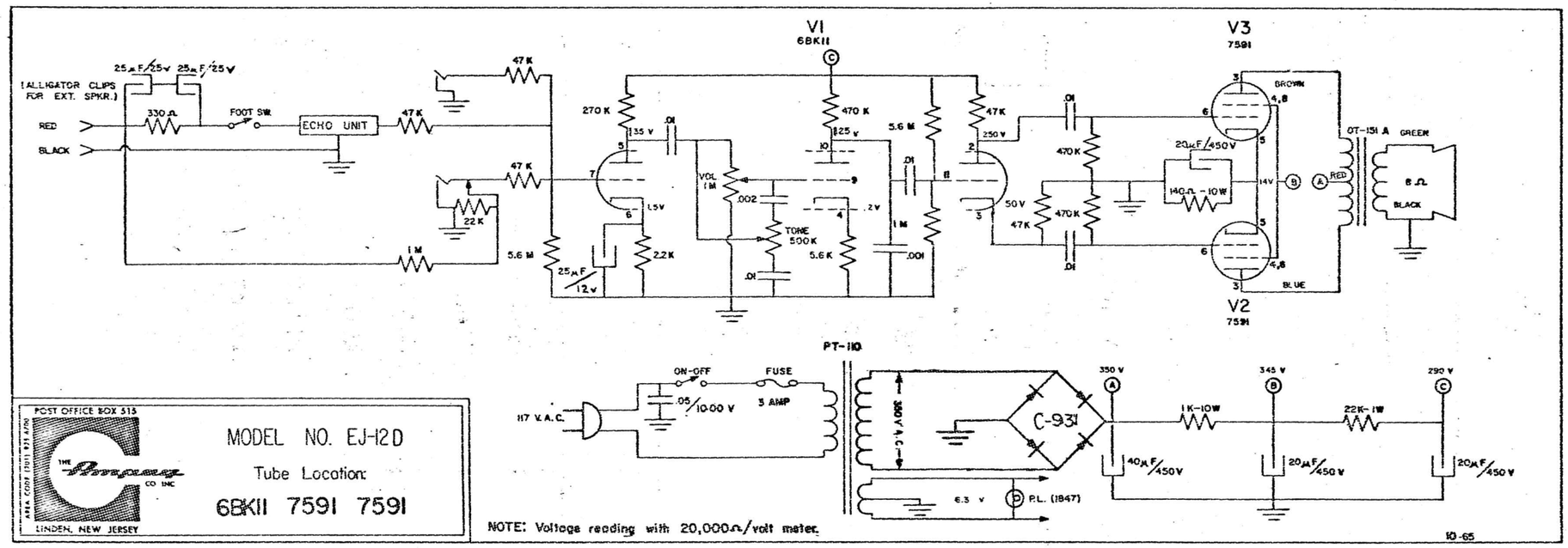
V1
6BK11
V3
7591
V2
7591
(ALLIGATOR CLIPS FOR EXT. SPKR.)
RED
BLACK
FOOT SW.
ECHO UNIT
BROWN
BLUE
OT-151 A
GREEN
8 Ω
BLACK
PT-110
ON-OFF
FUSE
3 AMP
117 V.A.C.
C-931
P.L. (1847)
POST OFFICE BOX 515
LINDEN, NEW JERSEY
MODEL NO. EJ-12D
Tube Location:
6BK11 7591 7591
NOTE: Voltage reading with 20,000Ω/volt meter.
10-65