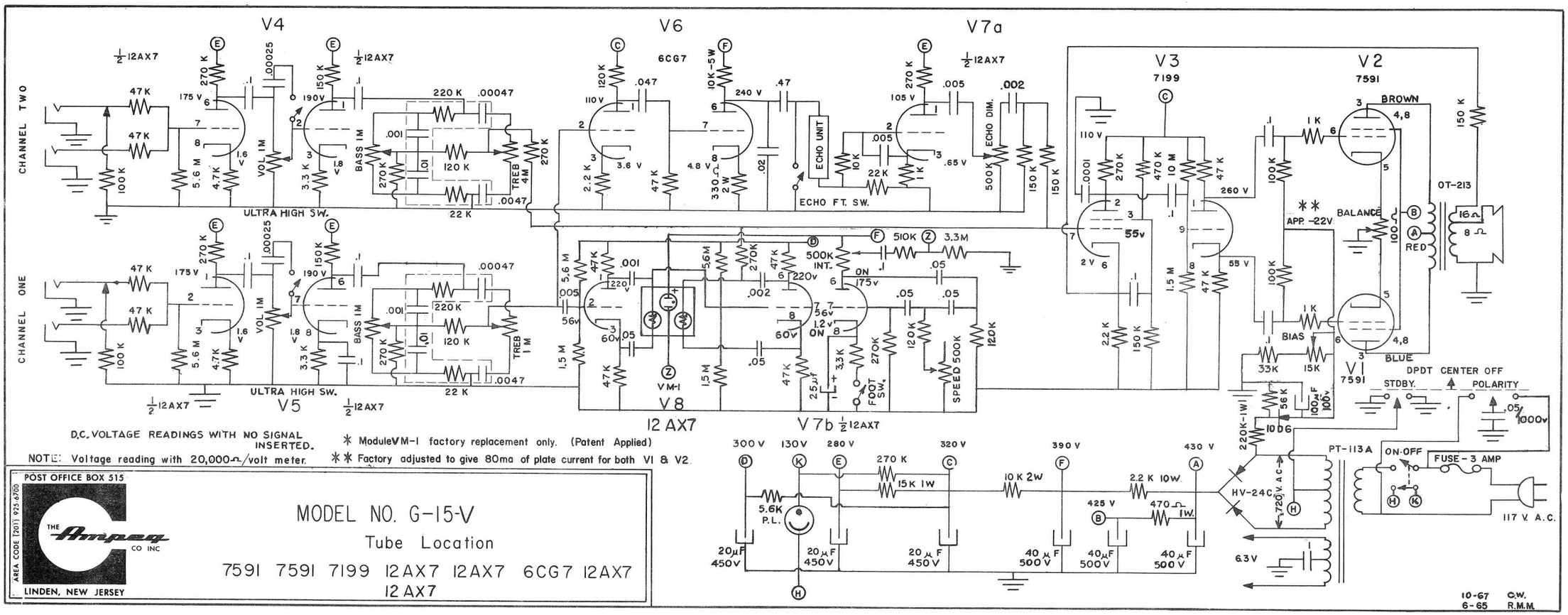
V4
½ 12AX7
V6
6CG7
V7a
½ 12AX7
V3
7199
V2
7591
CHANNEL TWO
CHANNEL ONE
ULTRA HIGH SW.
VOL 1M
BASS 1M
TREB 1M
TREB 4M
ECHO UNIT
ECHO DIM.
ECHO FT. SW.
BROWN
BLUE
RED
BALANCE
APP. -22V.
BIAS
OT-213
V1
7591
V5
½ 12AX7
V8
12 AX7
VM-1
FOOT SW.
SPEED 500K
V7b ½ 12AX7
DPDT CENTER OFF
STDBY.
POLARITY
PT-113A
ON-OFF
FUSE - 3 AMP
117 V. A.C.
HV-240
720 V. A.C.
6.3V
5.6K P.L.
D.C. VOLTAGE READINGS WITH NO SIGNAL INSERTED.
NOTE: Voltage reading with 20,000Ω/volt meter.
* Module VM-1 factory replacement only. (Patent Applied)
** Factory adjusted to give 80ma of plate current for both V1 & V2.
POST OFFICE BOX 515
AREA CODE (201) 925-6700
THE Ampeg CO INC
LINDEN, NEW JERSEY
MODEL NO. G-15-V
Tube Location
7591 7591 7199 12AX7 12AX7 6CG7 12AX7
12 AX7
10-67 C.W.
6-65 R.M.M.