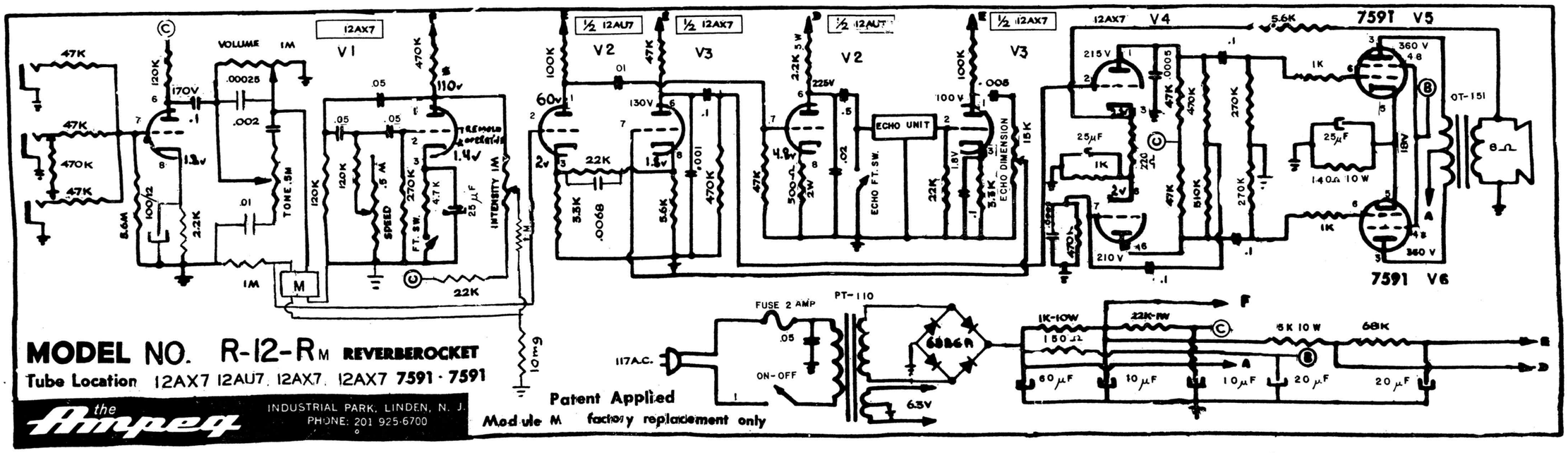

MODEL NO. R-12-RM REVERBEROCKET

Tube Location 12AX7 12AU7 12AX7 12AX7 **7591 · 7591**

the Ampeg

INDUSTRIAL PARK, LINDEN, N. J.
PHONE: 201 925-6700

Patent Applied

Module M factory replacement only

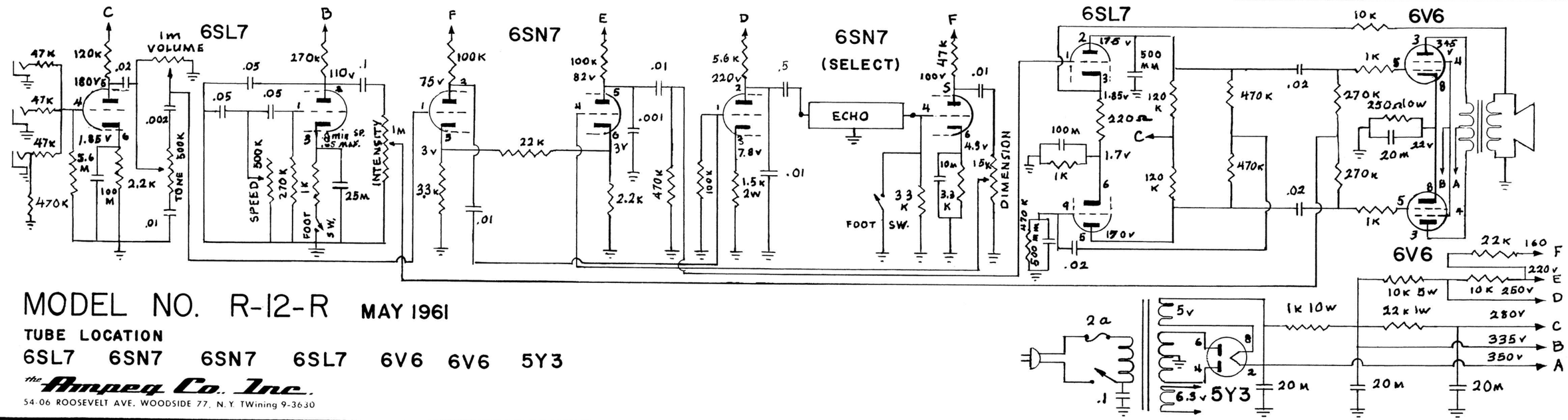

MODEL NO. R-12-R

MAY 1961

TUBE LOCATION

6SL7 6SN7 6SN7 6SL7 6V6 6V6 5Y3

the Ampeg Co., Inc.
54-06 ROOSEVELT AVE. WOODSIDE 77, N.Y. TWining 9-3630