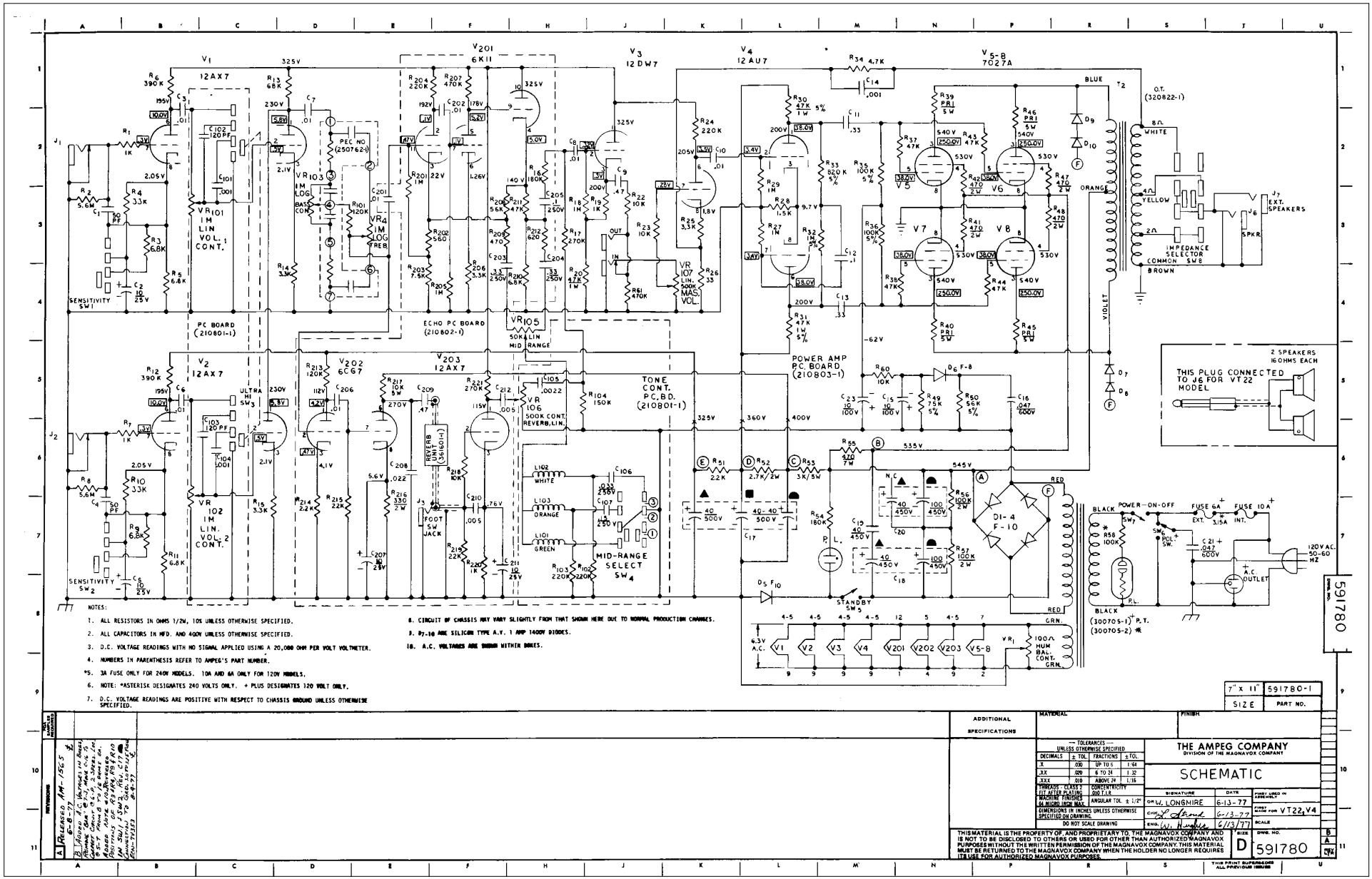

NOTES:

1. ALL RESISTORS IN OHMS 1/2W, 10% UNLESS OTHERWISE SPECIFIED.
2. ALL CAPACITORS IN MFD. AND 400V UNLESS OTHERWISE SPECIFIED.
3. D.C. VOLTAGE READINGS WITH NO SIGNAL APPLIED USING A 20,000 OHM PER VOLT VOLTMETER.
4. NUMBERS IN PARENTHESIS REFER TO AMPEG'S PART NUMBER.
*5. 3A FUSE ONLY FOR 240V MODELS. 10A AND 6A ONLY FOR 120V MODELS.
6. NOTE: *ASTERISK DESIGNATES 240 VOLTS ONLY. + PLUS DESIGNATES 120 VOLT ONLY.
7. D.C. VOLTAGE READINGS ARE POSITIVE WITH RESPECT TO CHASSIS GROUND UNLESS OTHERWISE SPECIFIED.
8. CIRCUIT OF CHASSIS MAY VARY SLIGHTLY FROM THAT SHOWN HERE DUE TO NORMAL PRODUCTION CHANGES.
9. D7-10 ARE SILICON TYPE A.V. 1 AMP 1400V DIODES.
10. A.C. VOLTAGES ARE SHOWN WITHIN BOXES.

SIZE	PART NO.
7" x 11"	591780-1

REVISIONS	
A	RELEASED AM-1965 6-8-77
B	ADDED A.C. VARIAGES IN BOXES. CHANGE CONN. OF C.T. TO PIN 2 OF V5-8. CHANGE R.C. VALUES TO 8.5-7 FROM 8 TO 16 OHMS ON. ADDED NOTE 10 REVISED NOTE 8 ADDED NOTE 9 ADDED NOTE 10 ADDED R1 ON SW1, SW2, R14, C17 CONNECTED TO GND. ON PIN 4 OF CONNECTOR J3 6-13-77

ADDITIONAL SPECIFICATIONS

MATERIAL

FINISH

— TOLERANCES — UNLESS OTHERWISE SPECIFIED

DECIMALS	± TOL.	FRACTIONS	± TOL.
.X	.030	UP TO 6	1/64
.XX	.020	6 TO 24	1/32
.XXX	.010	ABOVE 24	1/16

THREADS - CLASS 2 FIT AFTER PLATING
MACHINE FINISHES 64 MICRO INCH MAX.
CONCENTRICITY .010 T.I.R.
ANGULAR TOL. ± 1/2°
DIMENSIONS IN INCHES UNLESS OTHERWISE SPECIFIED ON DRAWING.
DO NOT SCALE DRAWING

THE AMPEG COMPANY
DIVISION OF THE MAGNAVOX COMPANY

SCHEMATIC

	SIGNATURE	DATE
DR. W. LONGMIRE		6-13-77
CHK.		6-13-77
ENG.		6/13/77

FIRST USED IN ASSEMBLY
FIRST USED FOR VT22, V4
SCALE

SIZE D — DWG. NO. 591780 — REV. B

THIS MATERIAL IS THE PROPERTY OF, AND PROPRIETARY TO, THE MAGNAVOX COMPANY AND IS NOT TO BE DISCLOSED TO OTHERS OR USED FOR OTHER THAN AUTHORIZED MAGNAVOX PURPOSES WITHOUT THE WRITTEN PERMISSION OF THE MAGNAVOX COMPANY. THIS MATERIAL MUST BE RETURNED TO THE MAGNAVOX COMPANY WHEN THE HOLDER NO LONGER REQUIRES IT FOR USE FOR AUTHORIZED MAGNAVOX PURPOSES.

THIS PRINT SUPERSEDES ALL PREVIOUS ISSUES

VT22 & V4 **(REV A)**

Ampeg

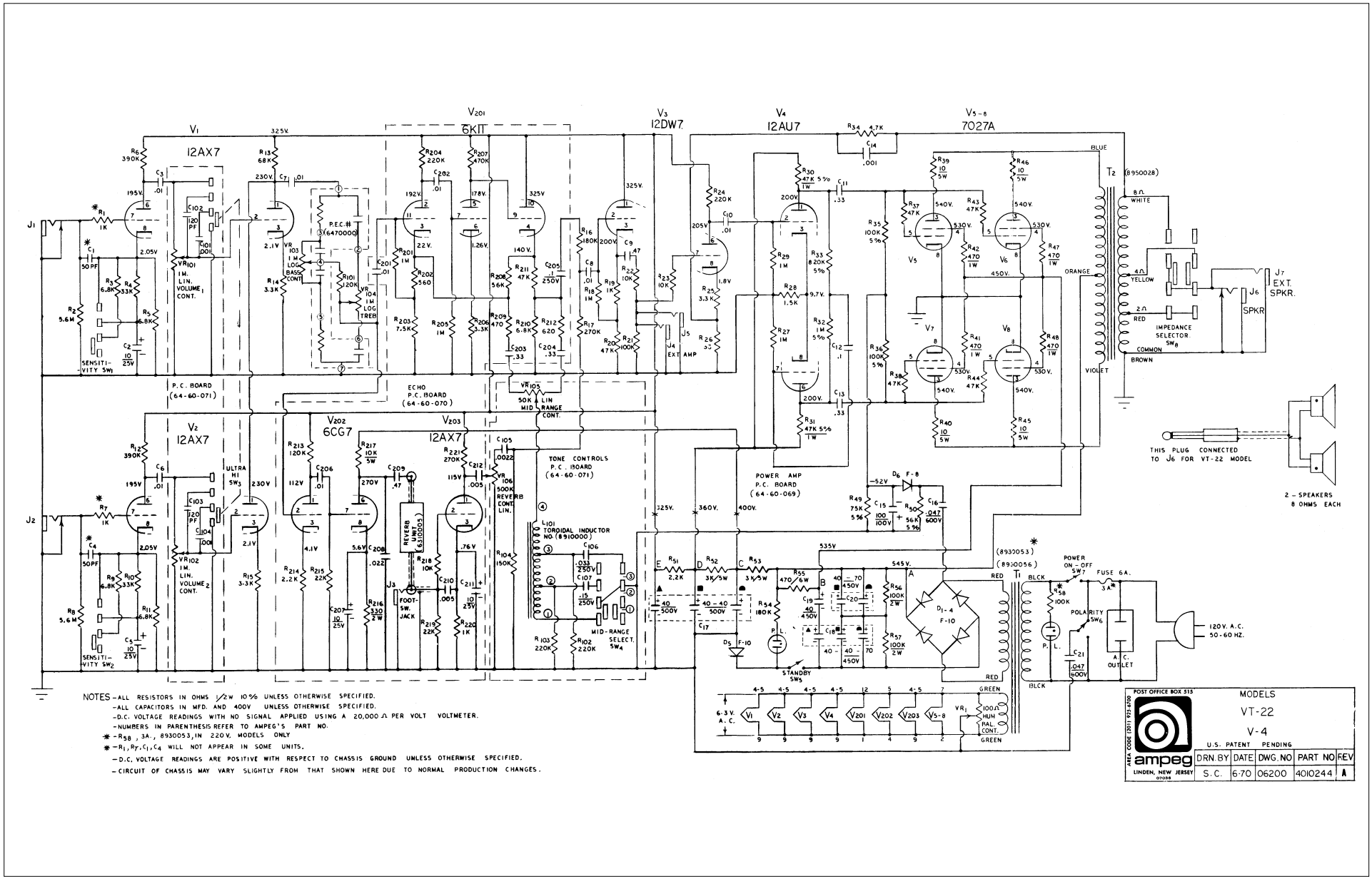

NOTES - ALL RESISTORS IN OHMS 1/2W 10% UNLESS OTHERWISE SPECIFIED.
- ALL CAPACITORS IN MFD. AND 400V UNLESS OTHERWISE SPECIFIED.
- D.C. VOLTAGE READINGS WITH NO SIGNAL APPLIED USING A 20,000 Ω PER VOLT VOLTMETER.
- NUMBERS IN PARENTHESIS REFER TO AMPEG'S PART NO.

* - R_{58}, 3A., 8930053, IN 220V. MODELS ONLY

* - R_1, R_7, C_1, C_4 WILL NOT APPEAR IN SOME UNITS.

- D.C. VOLTAGE READINGS ARE POSITIVE WITH RESPECT TO CHASSIS GROUND UNLESS OTHERWISE SPECIFIED.
- CIRCUIT OF CHASSIS MAY VARY SLIGHTLY FROM THAT SHOWN HERE DUE TO NORMAL PRODUCTION CHANGES.

POST OFFICE BOX 515 AREA CODE (201) 925-8700 ampeg LINDEN, NEW JERSEY 07036

MODELS VT-22 V-4

U.S. PATENT PENDING

DRN. BY	DATE	DWG. NO	PART NO	REV
S.C.	6-70	06200	4010244	A